Ambry Genetics®
A Konica Minolta Company

Expanding the detection range of DNA multigene panel testing with concurrent RNA sequencing

Holly LaDuca, Lily Hoang, Carolyn Horton, Jill S. Dolinsky, Lindsay Lipe, Shreya Malhotra, Jessica Profato, Tina Pesaran, Elizabeth C. Chao, Rachid Karam
Ambry Genetics, Aliso Viejo, CA

BACKGROUND

- There have been numerous reports of deep-intronic pathogenic variants in hereditary cancer genes.[1-5] However, most hereditary cancer genetic tests only target protein-coding regions (exons) due to the size and limited interpretability of noncoding variants in intronic regions.
- Here, we describe the use of concurrent DNA and RNA genetic testing (DGT/RGT) to identify disease-causing intronic variants in cases that would have yielded inconclusive or negative results with DNA-only genetic tests.[6]

METHODS

- Patients were clinician-referred for concurrent DNA and RNA hereditary cancer panel testing between 03/2019 and 04/2020.
- Molecular results were retrospectively reviewed to assess the spectrum of clinically actionable intronic variants beyond 5 base pairs on either side of the exon.

FIGURE 1. Aberrant splicing examples

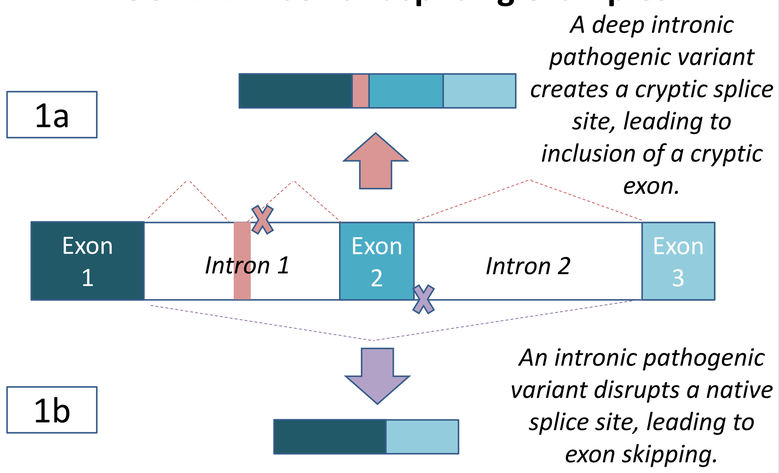

RESULTS

- Concurrent RGT led to the detection and classification of 11 pathogenic/likely pathogenic (P/LP) intronic variants deeper than +/-5 nucleotides into the intron, impacting 15 different families (Table 1).
- Deep intronic variants could only be detected by performing concurrent RGT alongside DGT since most DNA sequencing tests do not comprehensively analyze intronic regions (Figure 1a).
- Near intronic variants may be detected with DGT alone but cannot be classified as anything other than variants of unknown significance (VUS) without accompanying RNA studies (Figure 1b).
- In several families, previous genetic testing had been uninformative.
- All five *BRCA1/2* P/LP variants were classified as 'unknown significance' by other labs in ClinVar at the time of deposit. The *ATM* and *APC* P/LP variants had not previously been reported, and the *MSH2* LP variant had conflicting interpretations.

TABLE 1. Intronic Pathogenic/Likely Pathogenic Variants Beyond +/-5

Gene	Variant (# of families if seen in >1)	ClinVar classification from other clinical labs	Clinical history summary
BRCA1	c.5152+6T>G (2)	Unknown significance	Early onset breast cancer (<50) in both probands; family history of male breast cancer +/- additional cancers; one previously received inconclusive *BRCA1* testing results
	c.5333-6T>G	Unknown significance	Breast and ovarian cancer, family history of breast cancer <50 and kidney cancer; previously received inconclusive *BRCA1* testing results
	c.5407-25T>A (2)	Unknown significance	Both probands had ovarian cancer; one also had family history of breast cancer and previously received inconclusive *BRCA1* testing results
	c.81-9C>G	Unknown significance	Multiple primary breast cancers <50 and ovarian cancer, family history of breast and ovarian cancer, previously received inconclusive *BRCA1* testing results
BRCA2	c.8755-9T>A	Unknown significance	See Figure 2a below.
ATM	c.2466+1552G>C (3)	Absent	Case 1: breast cancer, family history of breast cancer <50 | Case 2: breast cancer <50 | Case 3: no cancer history, family history of ovarian cancer
	c.497-2661A>G	Absent	See Figure 2b below.
	c.8152-18T>G	Absent	Breast cancer <50, family history of breast cancer <50, biliary tract cancer, colorectal cancer and leukemia
	c.8584+16A>G	Absent	No cancer history, family history of breast cancer <50, melanoma and pancreatic cancer
APC	c.933+829A>G	Absent	100+ polyps, family history of polyposis
MSH2	c.2459-12A>G	Conflicting interpretations	Classic Lynch syndrome family, prior genetic testing of multiple family members (including paired germline/tumor testing) was uninformative

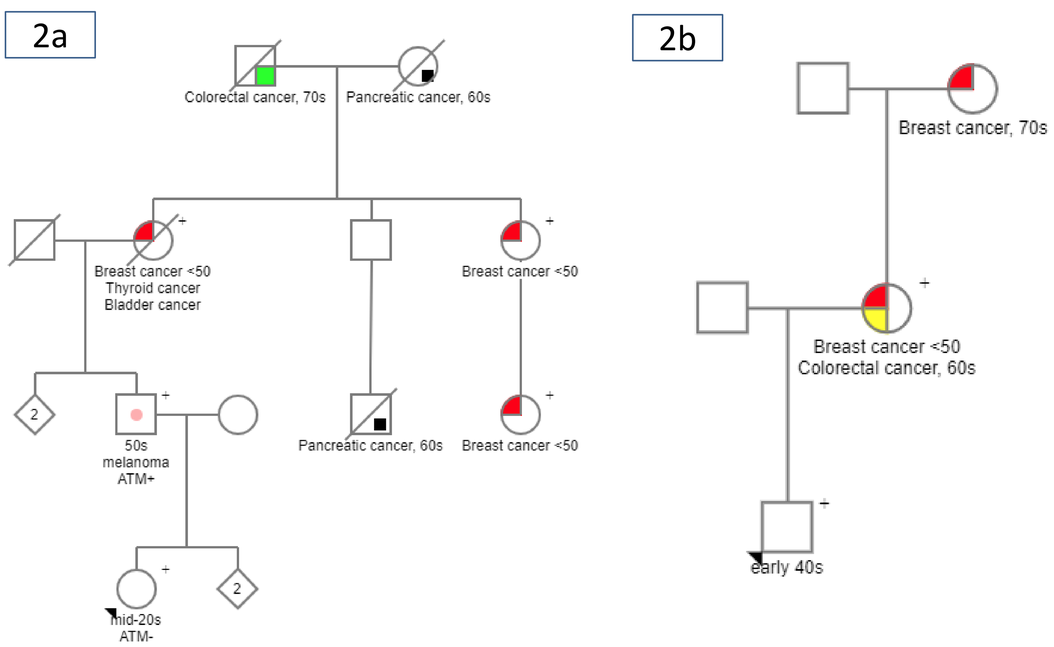

FIGURE 2. CASE EXAMPLES

2a) *BRCA2* c.8755-9T>A was identified on DGT. This alteration had previously been detected in multiple family members but classified as VUS. Results from RGT identified aberrant splicing supporting the classification as likely pathogenic. These results allow the patient to make informed decisions about managing her increased risk for cancer as well as risk stratification for other family members based on the presence/absence of the alteration. *(+ denotes BRCA2 carrier status)*

2b) RGT identified aberrant splicing in *ATM*, which led to the identification of a deep intronic pathogenic variant (c.497-2661A>G), well outside the detection range of DGT. The patient's mother subsequently tested positive for the alteration. These results are consistent with increased familial risk for early-onset breast cancer and alert the patient to his increased risk for pancreatic and prostate cancer. *(+ denotes ATM carrier status)*

TAKE-HOME POINTS

- Without RNA evidence, detection and interpretability of intronic DNA variants is limited, as evidenced by absent, uncertain, or conflicting entries in ClinVar.
- Observation of recurrent deep-intronic variants within a limited set of individuals receiving concurrent DGT/RGT suggests that a considerable number of families with PV/VLPs may be missed with stand-alone DGT.
- Ongoing DGT/RGT will improve diagnosis of high-risk families and play a role in improving medical management and cancer risk reduction strategies for patients and their family members.

REFERENCES

1. Cavalieri, S., et al., *Deep-intronic ATM mutation detected by genomic resequencing and corrected in vitro by antisense morpholino oligonucleotide (AMO).* Eur J Hum Genet, 2013. **21**(7): p. 774-8.
2. Clendenning, M., et al., *Mutation deep within an intron of MSH2 causes Lynch syndrome.* Fam Cancer, 2011. **10**(2): p. 297-301.
3. Coutinho, G., et al., *Functional significance of a deep intronic mutation in the ATM gene and evidence for an alternative exon 28a.* Hum Mutat, 2005. **25**(2): p. 118-24.
4. Montalban, G., et al., *Screening of BRCA1/2 deep intronic regions by targeted gene sequencing identifies the first germline BRCA1 variant causing pseudoexon activation in a patient with breast/ovarian cancer.* J Med Genet, 2019. **56**(2): p. 63-74.
5. Spier, I., et al., *Deep intronic APC mutations explain a substantial proportion of patients with familial or early-onset adenomatous polyposis.* Hum Mutat, 2012. **33**(7): p. 1045-50.
6. Landrith, T., et al., *Splicing profile by capture RNA-seq identifies pathogenic germline variants in tumor suppressor genes.* npj Precision Oncology, 2020.

15 Argonaut, Aliso Viejo, CA 92656 Toll Free 866 262 7943 Fax 949 900 5501 ambrygen.com